B2Bpartner

459128, 459129

A 1x

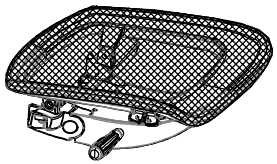

E 1x

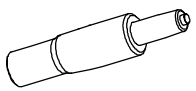

B 1x

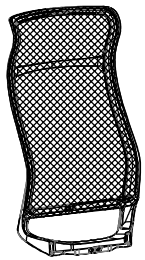

F 5x

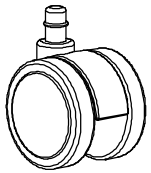

C

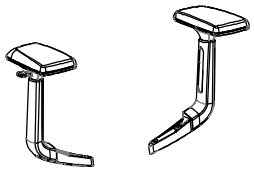

8x

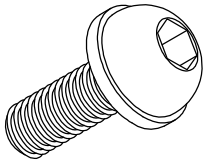

6X25

1x

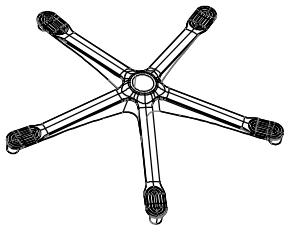

2 8x

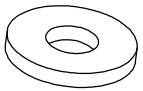
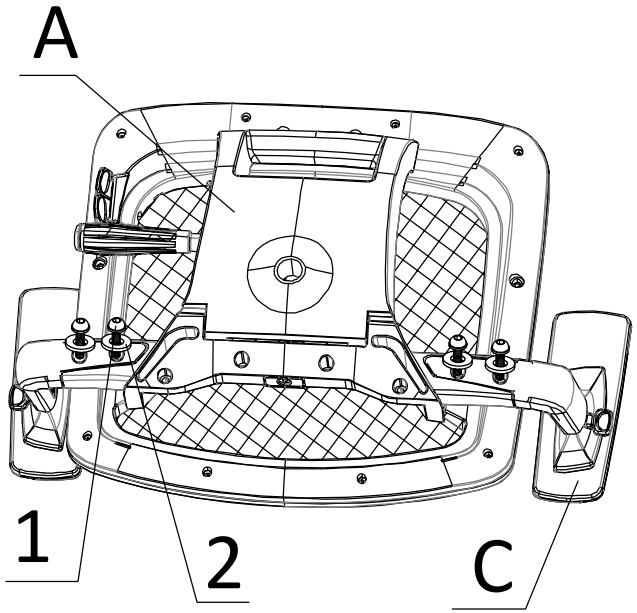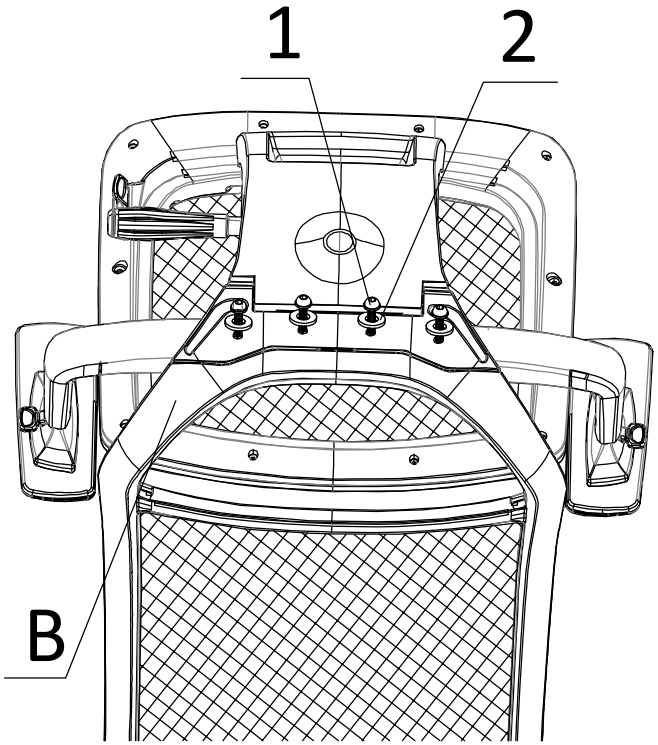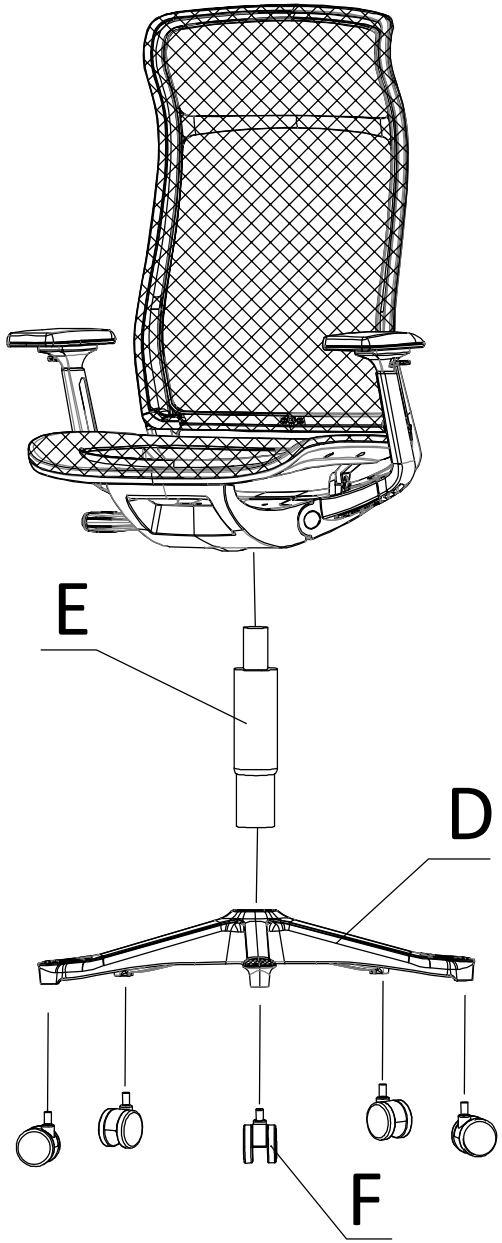
6X12